K41 360 INTELLIGENT AREA FLOODLIGHT SYSTEM

SCAN FOR INFORMATION

A high-performance, multi-functional 360° LED lighting system, built for demanding environments.

Up to 92,000 Equivalent Lumens Light Output

RITELITE (SYSTEMS) LTD

www.ritelite portablelighting.co.uk

Key Features

Automated light output control for maximised power efficiencies and energy savings

IK10 impact rated and built for tough environments. Corrosion resistant aluminium and stainless-steel construction

180 – 360 degree flexible setup for maximum flexibility and applications

Beam Control precision light direction to focus all the light where it is needed with minimised light pollution

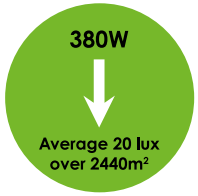

Large area light coverage from only 380W power requirement

Silent, emission-free, zero carbon lighting solution when powered by a RITE-POWER battery powered generator

RUGGED CONSTRUCTION

Polyethylene impact resistance handle

Robust aluminium case

Stackable and compact for transport and storage

Folding suspension eye for 360° deployment

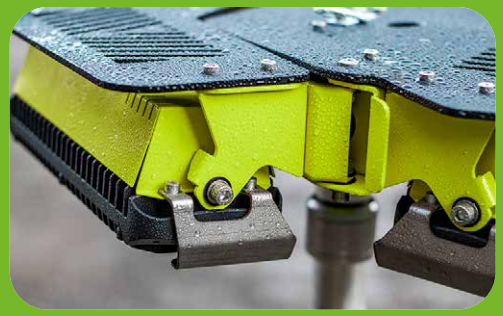

IP65 water resistant

K41 Area Lighting System Models

There are three standard K41 models to meet every application and budget. Additional optional features are available for all models outlined below with other bespoke specifications also available.

S1

180-360° configurable light system. Simple on / off control of the light with the light level able to be set to meet requirements via an integrated digital dimmer system from 0 -100% brightness. 5m down lead fitted. 110V or 240V input available.

Standard lead

Dimmer on head

S2

As S1 model but with the additional functionality of a light head mounted Dusk To Dawn (D2D) switch and a link box at the power input to enable multiple lights to be linked or daisy chained together to run from one power source.

+ Linkable pendant

+ Dusk to Dawn sensor

S3

The S3 model has all the functionality of the S1 & S2 models plus all light function controls within the ground level pendant. It also includes a microwave occupancy sensor enabling the light to automatically turn on at a pre-set level when motion is detected.

+ Ground level control box

+ Microwave occupancy sensor

Model Features

	K41-S1	K41-S2	K41-S3
0-100% dimmer	✓	✓	✓
Control method	In light head	In light head	Ground level pendant
Linkable functionality to other lights or equipment	N/A	✓	✓
Link position	N/A	Ground level	Ground level
Dusk-to-dawn sensor	N/A	✓	✓
Control position	N/A	In light head	Ground level pendant
Occupancy sensing	✗	✗	✓
Control position			Ground level pendant
Detachable in-line pendant connector system	✗	✗	Optional
Choice of 110V or 240V input	✓	✓	✓
5m cable with 110V or 240V plug	✓	✓	✓
Slide in diffuser set	Optional	Optional	Optional
Folding suspension eye	Optional	Optional	Optional
Pendant lockout box	N/A	N/A	Optional
Find me indication light	Optional	Optional	Optional

Accessories

K41-FIL
Find me indication light

K41-FSE
Folding suspension eyelet

K41-DS
Optional slide in diffuser ensures unwanted direct light is softened as required

K41-DIP
Detachable in-line pendant connector system

K41-PLB
Pendant lockout box. Tamper proof lock out box.

K41-S/BAG
Padded carry case with front pocket and carry strap

360° SETUP

180° SETUP

Technical Specifications

DIMENSIONS	WIDTH	HEIGHT	LENGTH
360º Configuration	561mm	161mm	535mm
180º Configuration	356mm	161mm	980mm
WEIGHT	13.4Kg		
POWER SUPPLY	100 - 240V AC input		
POWER CONSUMPTION	380W		
FREQUENCY	50/60Hz		
LUMENS	92,000 equivalent lumens*		
COLOUR TEMP	6500K		
CRI	>70		
AVERAGE LIFE	50,000 hours		
TEMP RANGE	-20°C to +50°C		

* When comparing light output to other symmetrical lensed beam pattern products

PRODUCT CODE	DESCRIPTION
K41-S1A	K41-S1A 110V fitted with IP44 industrial site plug**
K41-S1B	K41-S1B 240V fitted with IP44 industrial site plug**
K41-S2A	K41-S2A 110V fitted with IP44 industrial site plug**
K41-S2B	K41-S2B 240V fitted with IP44 industrial site plug**
K41-S3A	K41-S3A 110V fitted with IP44 industrial site plug**
K41-S3B	K41-S3B 240V fitted with IP44 industrial site plug**

** Wide range of country specific plugs available for non UK users

360° Area Lighting

TECHNICAL DRAWINGS

SIDE VIEW

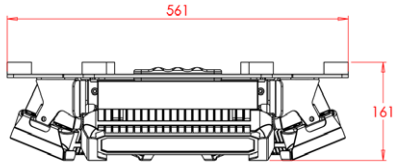

BOTTOM VIEW

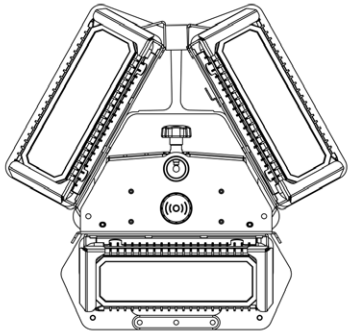

TOP VIEW

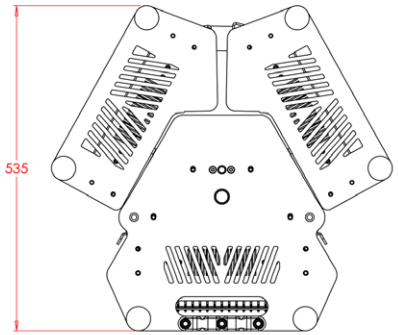

LUX LEVELS

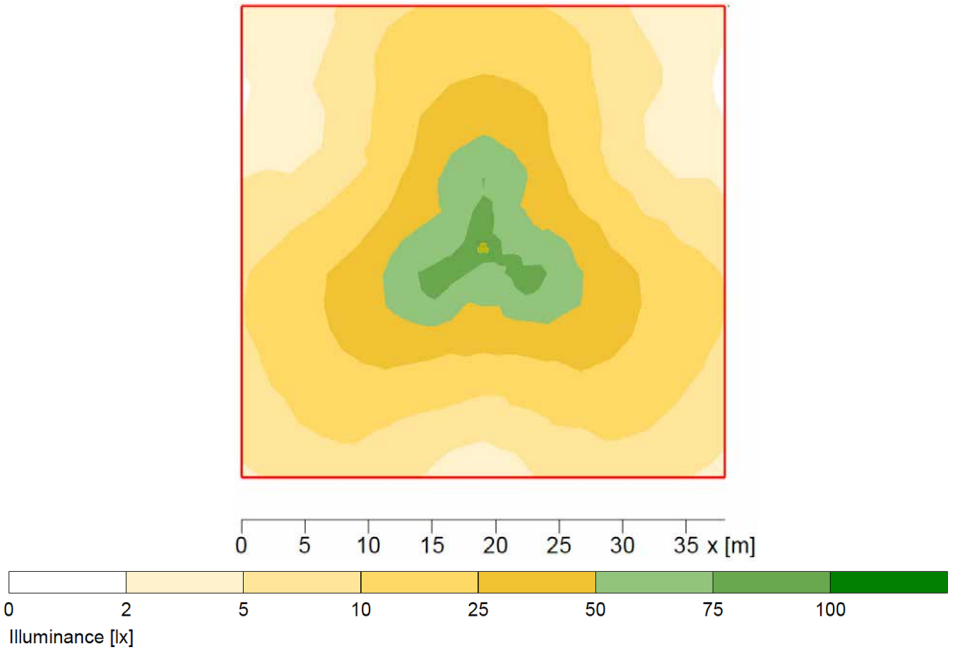

180° Directional Area Lighting

TECHNICAL DRAWINGS

SIDE VIEW

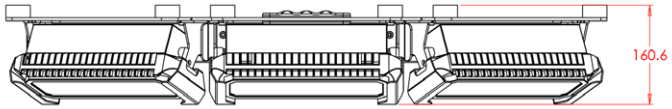

BOTTOM VIEW

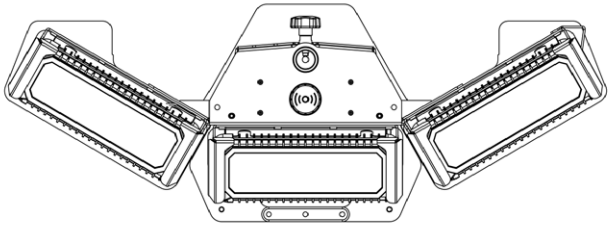

TOP VIEW

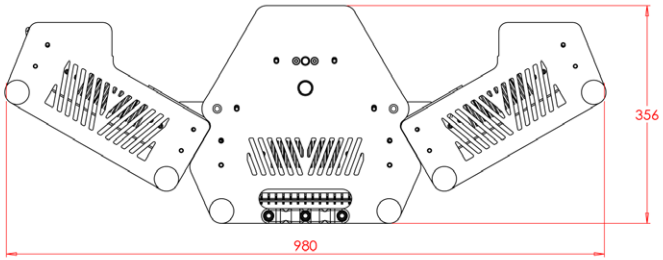

LUX LEVELS

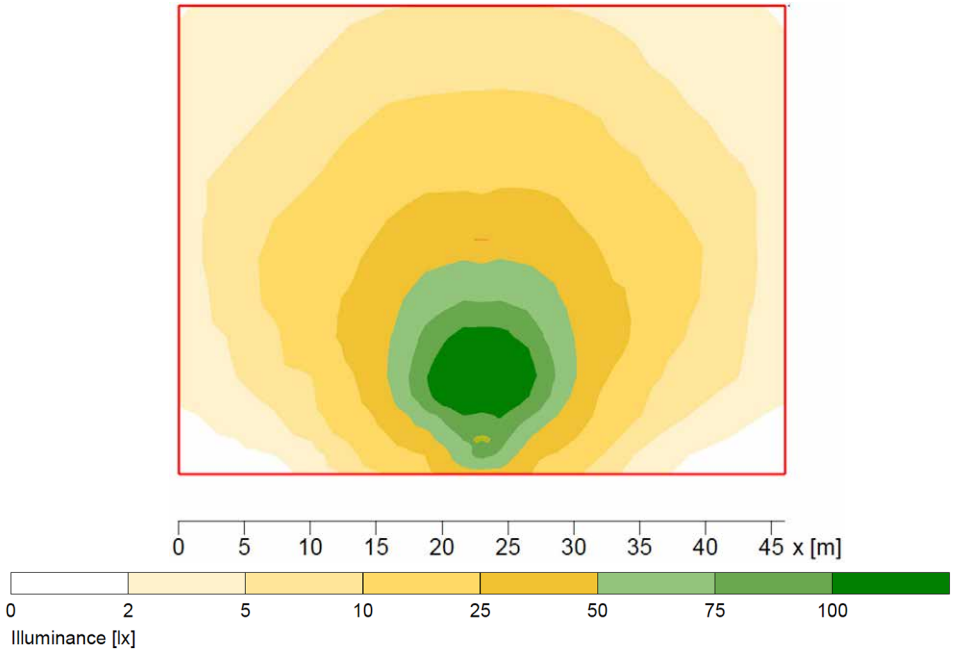

Tripod Options

4.0M LIGHTWEIGHT TRIPOD

- Lightweight aluminum construction
- 2 section tripod
- Fitted with DIN connector
- Combined winch and manual raise mast
- Air cushioned mast with controlled descent
- Independently adjustable legs
- Adjustable feet - rubber pad or metal spike
- Optional ballast bags for increased stability

TRIPOD	LIGHTWEIGHT
PRODUCT CODE	SLK45-LITE/TRP/4M
CLOSED LENGTH	1.32m
MAXIMUM HEIGHT	4.0m
EXTENDED LEG DIAMETER	2.1m
LOAD CAPACITY	14Kg
TRIPOD WEIGHT	9Kg

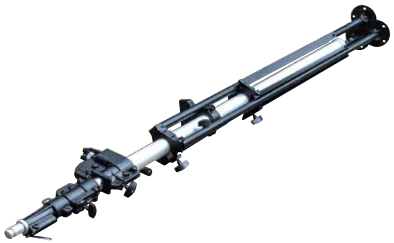

4.5M HEAVY DUTY TRIPOD

- Robust steel construction
- 3 section tripod
- Fitted with DIN connector
- Heavy duty winch
- Anti-drop safety interlock
- 1 x adjustable leg for uneven surfaces
- Leg pad diameter 12cm
- Peggable leg pads for increased stability

TRIPOD	HEAVY DUTY
PRODUCT CODE	K-LITE/TRP/4.5M
CLOSED LENGTH	2.0m
MAXIMUM HEIGHT	4.5m
EXTENDED LEG DIAMETER	1.9m
LOAD CAPACITY	30Kg
TRIPOD WEIGHT	21Kg

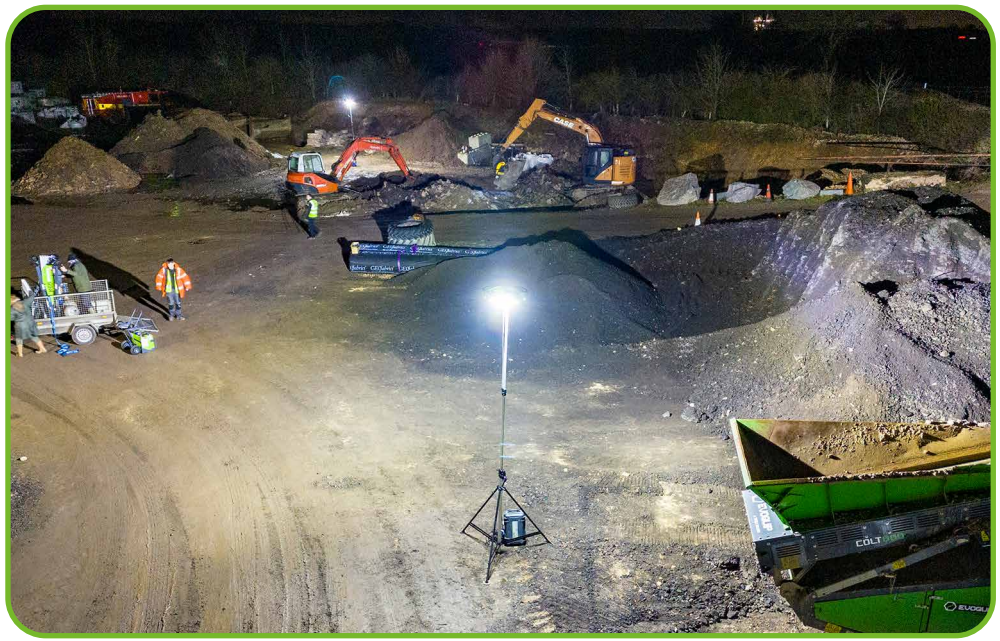

RITE-POWER

PORTABLE BATTERY POWERED GENERATORS

Ritelite's range of Industrial Portable Battery Powered Generators provides reliable, efficient portable power whenever and wherever it is needed, outside and inside. Designed to run both Ritelite's lighting range and other equipment the battery powered generators are waterproof, compact and easy to use. Available in 110V and 230V options in a variety of sizes.

RITE-POWER 1750

- **K41 duration 4 hours***
- 1750 watt hour battery capacity
- 750W continuous power
- Lithium-Ion battery
- Multi-function display to view status
- Power up to 2 K41 units at once
- 3 charger options
- Dimensions: 57 x 36 x 24cm
- Weight: 22Kg one person lift
- In-built handles and wheels

RITE-POWER 1750x2

- **K41 duration 8 hours***
- 3500 watt hour battery capacity
- 750W continuous power
- Lithium-Ion battery
- Multi-function display to view status
- Power up to 2 K41 units at once
- 3 charger options
- Dimensions: 58 x 40 x 30cm
- Weight: 36Kg multiple person lift
- In-built handles and wheels

RITE-POWER 3850

- **K41 duration 9 hours***
- 3850 watt hour battery capacity
- 2500W continuous power
- Lithium Iron Phosphate battery
- Multi-function display to view status
- Power up to 6 K41 units at once
- 3 charger options
- Dimensions: 72 x 37 x 47cm
- Weight: 52Kg multiple person lift
- Optional trolley for transport

* 1 generator powering 1 x K41. Duration may depend on operating conditions.

www.riteliteportablelighting.co.uk | E-mail: sales@ritelite.co.uk

RITELITE (SYSTEMS) LTD

Ritelite (Systems) Limited are a global, market-leading manufacturer, of innovative, professional and industrial mobile and portable area lighting and power systems and class leaders in illumination, performance and power efficiency.

For over 35 years, our journey to success has been driven by the design and manufacture of high-performance, high-efficiency lighting and power solutions. At Ritelite, we thrive on flexibility, embracing unconventional thinking and leveraging state-of-the-art technologies to collaborate closely with our customers. This partnership approach allows us to continually evolve our product range to meet the ever-evolving demands of our valued customers and markets.

When you invest in a Ritelite lighting product you are embracing our design philosophy - to provide the highest level of "usable light" to the widest range of work task situations. Our products are engineered to be efficient, flexible, versatile, robust, and highly reliable ensuring they stand the test of time. All Ritelite lighting solutions feature our unique beam-controlled lighting design giving maximum useful light for any application with minimised glare and light pollution. Our product range is also eco-conscious, offering zero emission, silent-running power solutions either through in-built highly efficient lithium batteries or via our innovative RITE-POWER portable battery-powered generators.

BESPOKE CUSTOMER SOLUTIONS

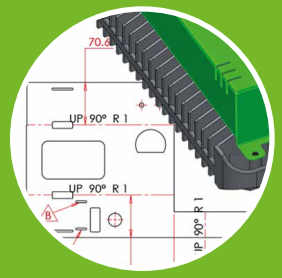

IN-HOUSE DESIGN AND DEVELOPMENT

BRITISH MANUFACTURERS FOR OVER 35 YEARS

EXPERTS IN LED TECHNOLOGY & POWER EFFICIENCY

HIGH QUALITY PRODUCTS & PROCESSES, ISO 9001 & 14001:2015 ACCREDITED

CONTACT US

UK Enquiries

Email: sales@ritelite.co.uk

+44 (0) 1780 758585

Non UK Enquiries

E-mail: export@ritelite.co.uk

+44 (0) 1780 758582 | +49 (0) 1764 5822464

www.riteliteportablelighting.co.uk

RBR-14b V2 250624